Audio from A toZ

RS 33-1090 PZM
Balanced Output / P48 Modification Kit

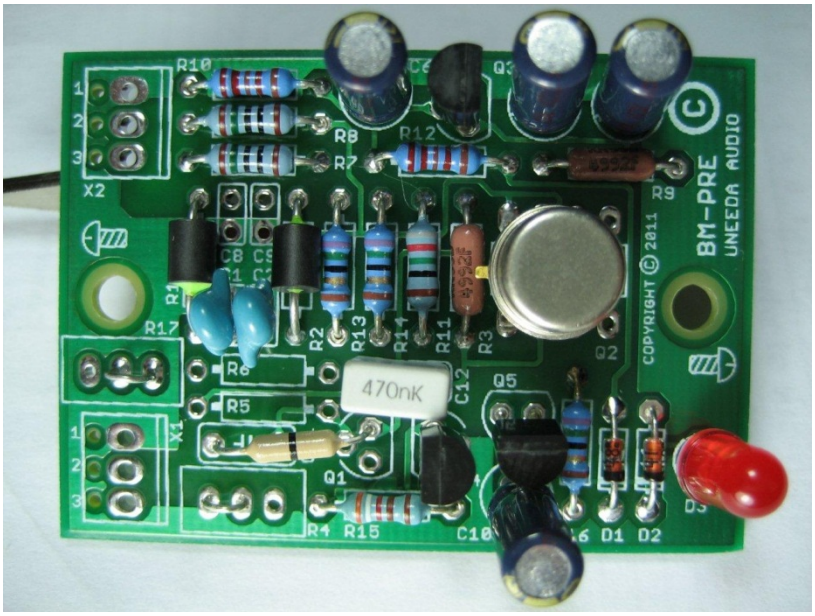

Uneeda Audio
Sammamish, WA 98074 USA
pzm@uneeda-audio.com

Table of Contents

Introduction

The Uneeda Audio PZM Modification kit is a small kit of parts to help home constructors modify their microphones. The original concept was just a bag of parts with a schematic and an assembly drawing. Perhaps this deterred some constructors, but after spending the time and effort redesigning the board, it seemed to warrant including more detailed instructions. Those "skilled in the art" may proceed without further assistance. The kit comprises: the circuit board, these instructions, the schematic, and all electronic parts needed to finish the circuit board. There's even some small-diameter solder included as some of the circuit board pads are teeny-tiny indeed[1]. The microphone is NOT included. Unlike a Heathkit, this kit does not include an enclosure, hardware, or connectors.

If you've ever done any sort of electronic assembly, and you know how to solder on a printed circuit board, you should have no trouble assembling this. You should have a temperature controlled soldering iron that can be set to 600-700 degrees F, with a small chisel tip. No soldering guns, please. Flush cutters are nice for lead trimming, but diagonal cutters will do. Long-nose pliers are handy for wire forming.

Soldering

With any circuit, proper soldering is essential. It's not difficult, but this kit is not recommended for a first soldering project. A length of suitable solder is included with the kit. You'll need the following soldering equipment:

1. Temperature controlled soldering iron with a suitably small tip capable of being adjusted to a tip temperature between 600-700 degrees Fahrenheit.
2. 63/37 alloy rosin-core solder, .031" diameter. 60/40 alloy is acceptable. (63/37 supplied, see footnote)

There are solder pads on both sides of the board, but they are internally connected **and it is NOT necessary to solder the parts on both sides of the board. The correct solder is supplied with the kit. Please use it, because we know that it works. Do not use other solders or separately applied flux. It simply is not needed or necessary.**

Desoldering

If you goof, be very careful when desoldering. Each hole has plating that connects the top layer with the bottom layer. If you're not careful, you'll pull the plating out when you remove the part. If this happens, be sure to solder the part on both sides of the board. **The very best tool for this sort of work is a vacuum powered solder sucker**. In next to last, and last place are the hand operated desoldering pumps and solder wick. **If you don't have a vacuum powered desoldering tool, you want to avoid having to desolder anything.**

- **The best thing you can do is to be double damn sure before you solder, so you don't have to desolder.**
- If you have to desolder a resistor, put the board in a vise, grab the lead with a pair of long nose pliers, apply tension, heat the joint from the other side of the board. Once the solder melts, the lead should pull free. Repeat for the other end of the part.
- Anything with more than 2 leads can be very difficult.
- Consider sacrificing the part (cut the body off) so you can remove the leads one at a time.
- Once you get the part clear of the hole, you can clear the hole with a round toothpick, or something straight and pointy that doesn't take solder, like a dental pick.

It may be easier to mount the board in a vise, grasp the lead with a pair of pliers, heat the connection while pulling on the pliers. Afterwards use something like a dental pick or the desoldering pump to remove the solder from the hole. If you don't have a vacuum powered solder sucker, the safest method is to cut the part in two (or cut the leads at the part body), and then work from the component side of the board. For radial leaded components, like the capacitors, this may not be possible.

Replacement Parts

If you need a replacement part for any reason, Uneeda Audio will replace up to 6 parts at no charge except for the LM394. There are limits to our generosity, and you are advised to not test them[2]. The LM394 is $20 because they are no longer made. Circuit board damage is not included in this offer.. **Best, of course, is to not goof in the first place!**

PZM Cable Length

The output of the PZM plate is moderate impedance (well under 10k-ohms). It is unbalanced, but since one end of the unbalanced line is floating out in free space, there is little likelihood of any current flow in the shield, which is usually why unbalanced wiring likes to hum. The impedance is reasonably low, so high-frequency loss is not an issue.The cable supplied by RS is fairly long, and you may want to shorten it, which is your privilege. All testing was performed with the cable cut about 12-inches shorter than it was supplied. The test lab is in a moderate RF environment, which is the biggest concern with

[1] With the adoption of RoHS restrictions in EU countries, solder is not supplied with kits sent to RoHS countries .

[2] Offer can be withdrawn at a moment's notice, at our whim and/or caprice.

leaving the cable at the factory supplied length. Should you choose to shorten it, consider leaving the cable long enough to reach the floor from the highest height that the microphone is likely to be operated from, 10-feet perhaps? The cable at the balanced low-impedance output can be nearly any length, several hundred feet should not be a problem.

Parts Identification

There are many 1% resistors used in this design. Some are marked with the value, some are color coded, and some may not have any value markings at all. All parts are pre-sorted for you. We use the European convention of writing values without using a decimal point (which can get lost).

Unlike a 5% or 10% resistor, a 1% resistor has three digits as part of its value. The fourth digit is the multiplier. The colors used are the same as for other resistors, however the tolerance band is brown rather than gold or silver. If the resistor is marked with numbers, the first three digits are significant, the fourth is the multiplier. If the resistor is banded, then (again) the first three bands are significant and the fourth band is the multiplier. These resistors are all used.

Value	Marked
75R0, 75.0 ohms	75R, vio/grn/blk/gold
150R0, 150.0 ohms	1500, brn/grn/blk/blk
825R, 825 ohms	8250, gry/red/grn/blk
3k92, 3920 ohms, 3.92k	3921, org/wht/red/brn
22k1, 22100 ohms, 22.1k	2212, red/red/brn/red
49k9, 49900 ohms, 49.9k	4992, yel/wht/wht/red
1Meg, 1,000,000 ohms, 1M	1004, brn/blk/blk/yel

Parts List

CFG 1	CFG 2	CFG 3	Ref Des	Description	Remarks
0	1	1	R6	Res, MF, 3k92, 1% <org/wht/red/brn>	
1	0	1	R15	Res, MF, 3k92, 1% <org/wht/red/brn>	
2	2	2	R3, R9	Res, MF, 49k9, 1% <yel/wht/wht/red>	
1	1	1	R11	Res, MF, 825R, 1% <gry/red/grn/blk>	Gain set resistor
3	3	3	R13, R14, R16	Res, MF, 75R0, 1% <vio/grn/blk/gold>	
2	2	2	R7, R8	Res, MF, 150R, 1% <brn/grn/blk/blk>	
2	2	2	R10, R12	Res, MF, 22k1, 1% <red/red/brn/red>	
0	0	2	R1, R5	Res, MF, 1M0, 1% <brn/blk/blk/yel>	R5 mounted on PCB. R1 mounted on input jack.
0	1	0	R5	Jumper, 0-ohm (looks like a resistor, but with a single black band)	
0	0	0	R4, R17	trimpots. For future use	not supplied
1	0	0	no designation, see assembly dwg for config 1.	0-ohm jumper	
2	2	2	L1, L2	Bead, Ferrite, Taiyo Yuden FBA04VA450BA-00	PCB marked R1, R2
1	1	2	C11, C12	Cap, film, 470nF	one part used for configs 1, 2, and two parts used for config 3.
3	3	3	C5, C6, C7, C10	Cap, lytic, submini, 10uF, 35V	
2	2	2	C1, C2, C8, C9	Cap, cer, 120pf or 150pf	C8, C9 not stuffed
2	2	2	D1, D2	Diode, 1N914/1N4148	
0	1	0	Q1	Transistor, JFET, N-CH, 2N3819	config 2
1	0	0	Q4	Transistor, JFET, N-CH, 2N3819	config 1
0	0	2	Q1, Q4	Transistor, JFET, N-CH, 2N3819, 10% match	config 3
2	2	2	Q3, Q5	Transistor, NPN, 2N4401	
1	1	1	Q2	Transistor, dual, supermatch, NPN, LM394	
opt	opt	opt	D3	Red Led or jumper**. If no LED, then stuff jumper**.	Not supplied. Other colors ok, but red preferred.
1	1		PCB	Printed Circuit Board	
0	0		R2	This reference not used.	
1	1	1	no reference, not on pcb	Res, CF, 22R, 0.5W	**See Page 10.**
1	1	1	no reference, not on pcb	Cap, cer, 100nF	**See Page 10.**

PCB Assembly Instructions

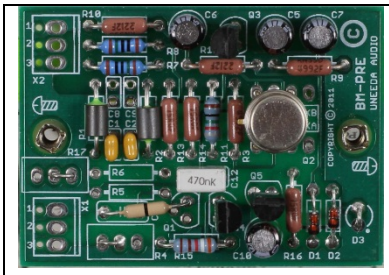

Completed Rev C, Config 1 Board. (Note jumper instead of LED)

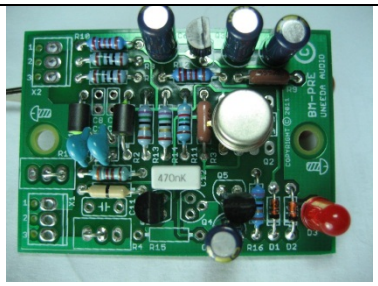

Completed Config 2 Board. (rev C) (Note LED instead of jumper)

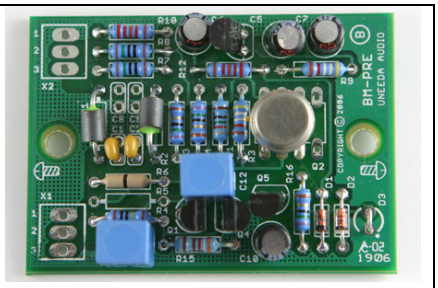

Completed Config 3 Board (rev B) (no trimpots, but otherwise the same.

Note: Refer to the configuration specific assembly drawings at the end of this document. They are important.
The board shown for configuration 3 is revision B. Refer to the configuration drawings at the end of this document.
Appendix B describes the different microphone models and their configuration requirements
Parts supplied may look different from those shown in the above pictures.

Initial Board Assembly

The basic idea behind the sequence used is component height. That way, when you flip the board over to solder, gravity will help you pin the components against the board. All three configurations of the board require stuffing the following components.

1. Stuff and solder the two diodes, D1 and D2. Mind their polarity. Trim the leads. (the color bands correspond to the bar in the symbol)
2. Stuff these resistors:
   R3, R9: 49k9, yel/wht/wht/red
   R11: 825R, gry/red/grn/blk
   R13, R14, R16: 75R0, vio/grn/blk/gold
   R7, R8: 150R, brn/grn/blk/blk
   R10, R12: 22k1, red/red/brn/red
3. Flip the board over and solder all the resistor leads and trim the excess wire from each connection.
4. L1 and L2 are ferrite beads. Stuff, solder, trim.
5. Trimpots R4, R17 need to be bypassed. Take a piece of resistor lead, bend it into a U and insert between pins 1 and 2 or between pins 1 and 3 of each part. Solder and trim.
6. Stuff C1, C2 (120pf ceramic). Solder and trim.
7. Stuff C5, C6, C7, C10 (10uF, electrolytic). Don't force them flush with the board. Observe polarity. Solder and trim.
8. Stuff and solder C12 (470nF, film).
9. D3, a red LED, is optional. If you're not going to use it, the two holes must be connected together with a short piece of wire. Use a piece of resistor wire. Bend it into a U and solder it into place. If you are installing the LED, then see the section following this assembly list.
10. Stuff transistors Q3, and Q5 (2N4401). Pay attention to the orientation of each transistor. Q2, the LM394 may be packaged in an 8-pin DIP or in an 8-pin metal can. The metal can package has pins 1 and 6 aligned with the metal tab, and the leads are numbered clockwise from pin 1. The metal tab aligns with the orientation slot of the IC pattern. Use the eight pads that are arranged in two rows of four.Three leads insert into the first three holes of the IC pattern and the remaining three leads insert into the holes on the opposite side of the pattern. Pins 4 and 5 remain empty. Ensure that you do not use the smaller pads inside the DIP outline. Double check before soldering; you want to get this part right on the first try.Now solder and trim the transistor leads. Refer to the pictures of the PCB.
    a. **Note**: Pins 4 and 5 are not used with the metal can package. The RoHS compliant LM394 is no longer available.

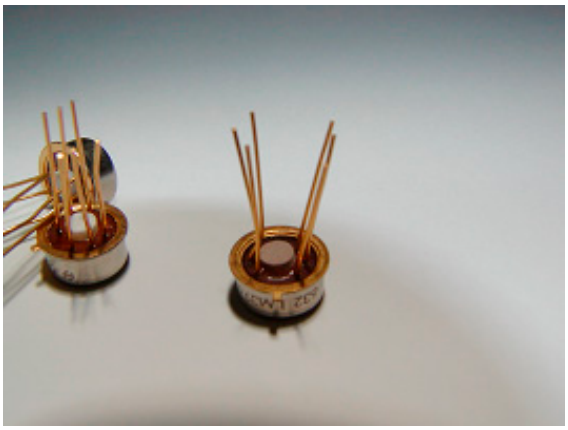

LM394 details: Note the metal tab. There are two rows of leads on each side of the tab.

This completes the portion of the circuit that is common to all configurations. **You will have a 22R and 100nF capacitor left. Their use is discussed in the section on Enclosures, Page 10.**

Three Configurations

Refer to the assembly drawings on pages 13 and 14. The photos shown here are for the revision B board. They are close, but not quite the same as the revision C board.

For use with RS 33-1080 and 33-1090) (config 1)

In this configuration, Q4 operates as a current souce load for the microphone capsule.

1. Stuff and solder a zero-ohm jumper (looks like a resistor, but has a single black band) between the drain connection of Q1 to the C11 pad nearest the input connections. Circuit-wise this connects the output of Q4 to terminal 1 of the input.
2. Install the jumpers on R17 and R4. Although not shown in the photo, you can jump the outside connections of R4 and R17 (pins 1 and 3).
3. Stuff Q4 (2N3819) and R15 (3k92, org/wht/red/brn). Solder and trim.
4. Snip the wire between the battery box and the microphone. Toss the battery box. Cut the wire near the battery box end.
5. Strip the cable coming from the microphone. Connect the shield to X1-3, connect the inner conductor to X1-2. **Note**: X1-3 is **not** grounded.
6. Wire the input/output connectors as follows:

X1-1 - NC	X2-1 - XLR pin 1 + case
X1-2 – Hot/Signal	X2-2 - XLR pin 2
X1-3 - Shield	X2-3 - XLR pin 3

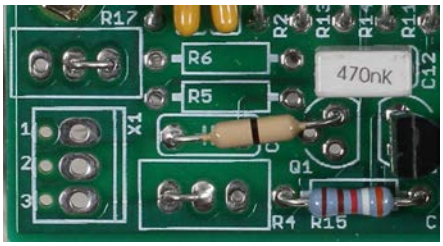

Stuffing detail for Config 1.

Note jumpers on R17 and R4

These are also needed for Configs 2 & 3.

For use with RS 33-3020 and 33-3022, or a generic electret capsule. (config 2)

In this configuration, Q1 operates as a current source load for the microphone.

1. Stuff and solder a zero-ohm jumper (looks like a resistor, but has a single black band) for R5.
2. Stuff R6. Solder and trim.
3. Now install Q1. Solder and trim.
4. Install the jumpers on R17 and R4. Although not shown in the photo, you can jump the outside connections of R4 and R17 (pins 1 and 3). Refer to the photo for Configuration 1.
5. Snip the wire between the battery box and the microphone. Toss the battery box. This step does not apply to the generic capsule.
6. Strip the cable coming from the microphone. For the 330-3022 model, snip the white wire and ignore it. Connect the shield to X1-1, connect the inner conductor to X1-2. For the generic capsule, the ground lead connects to X1-1 and the 'hot' lead connects to X1-2.
7. Wire the input/output connections as follows:

X1-1 - Shield	X2-1 - XLR pin 1 + case
X1-2 – Hot/Signal	X2-2 - XLR pin 3
X1-3 - NC	X2-3 - XLR pin 2

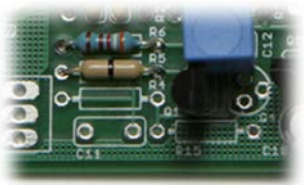

Stuffing detail for Config 2
see above for jumpers needed
Rev B board shown.

For use as a direct box (config 3)

The direct box configuration provides a high (> ½ megohm) input impedance which is ideal for piezo and other self-generating pickups. There is no provision for floating the ground between the DI box and the console's ground. For this reason, this configuration can not be used with a companion amplifier that is multed to the pickup and the DI box. In a studio application, this should not be a problem.

1. Stuff R6 (3k92, org/wht/red/brn), R4 (1Meg, brn/blk/blk/yel). Solder and trim.
2. Stuff a zero-ohm jumper for R6 (looks like a resistor but has a single black band). Solder and trim.
3. Install the jumpers at R4 and R17. Solder and trim. You should just jump pins 1 and 3 of the trimpot pads.
4. Stuff Q1 and Q4 (2N3819). Solder and trim.
5. Stuff C11 (470nF, film). Solder and trim.
6. Connect the input jack shield to X1-1, the hot lead to X1-3. Add a 1-megohm (or larger) resistor, R1, between hot and shield at the jack. This should be a shorting jack, wired so the input is shorted to ground with no plug inserted.
7. Wire the input/output connectors as follows:

X1-1 – Input Ground + case	X2-1 - XLR pin 1
X1-2 – NC	X2-2 - XLR pin 2
X1-3 – Input/signal	X2-3 - XLR pin 3
Use a shorting jack for the input!	**Connect case to pin 1 thru 56R**

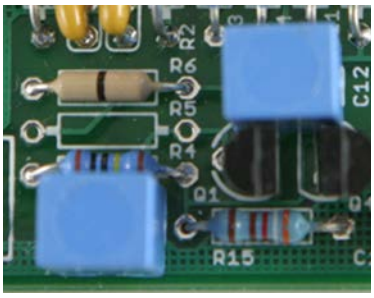

Stuffing detail for Config 3.

See above for jumpers needed

Rev B board shown.

The LED

D3, a red LED, is optional. It serves as a pilot light. It can be another color, but I prefer red because the voltage drop is lower. Whatever part you choose, use a high-efficiency LED because there isn't much current flowing and there is no way to increase it without affecting another part of the circuit.

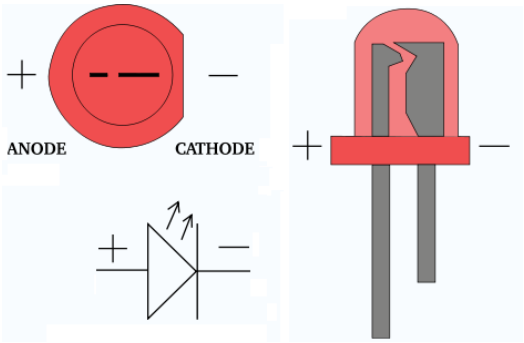

The LED is polarity sensitive. The two wires are unequal length. When you insert the LED, orient it so the longer lead is in the hole nearest the mounting hole for the circuit board. **If you don't stuff it, you must connect the two holes with a piece of wire. If you get it backwards, the circuit won't work, and the LED won't illuminate.**

The pads that the LED mounts in are small and fragile, so it pays to get the LED inserted correctly the first time, because you risk damaging the board if you get it wrong and have to desolder it.

If you cut the leads before installing the part, cut them to preserve the unequal length.

The two leads (wires) are different length for a reason: the longer one is the anode of the part (the anode is the arrow part of the symbol). If you look closely at the LED, you'll see there is a flange at the bottom, and one side of that flange is flat. The flat indicates the cathode (bar part of the symbol) of the LED.

On the board, locate the spot for D3, and look closely at the symbol. On one side of the symbol, there is a dot. That's where the cathode (short lead) of the LED goes.

Finally, if this is too complicated, then save the LED for last. Do this:

- Don't solder the jumper at D3.
- Complete all other wiring, including the microphone capsule.
- Insert, but **DO NOT SOLDER** the jumper at D3. Use a piece of resistor wire. You have lots of that right now, right?
- Connect the board to a P48 equipped microphone input. Ensure that P48 is enabled.
- Turn the gain up and listen. It should work, and the microphone should pick up audio. If not, try wiggling the jumper at D3, or spreading the legs slightly. Turn the gain down when you do this, as it **will** make loud/ugly noises.
- Once it works, mute the monitors, remove the jumper and insert the LED but DO NOT SOLDER. Leave monitors muted.
- If the LED lights, then unplug the preamp from the input, turn the board over and solder the connections. It is now OK to trim the leads to any length you want.
- If the LED doesn't light, then remove it and reverse it. It should now light. If so, then unplug the preamp from the input, turn the board over, and solder the connections.
- If the LED doesn't light in either of the two preceding steps, then there's something else wrong with the circuit. Troubleshoot that, and then deal with the LED. It will make things easier if you insert (but do NOT solder) the jumper in place of the LED, then do your troubleshooting. Voltage measurements will be completely wacko without the jumper in place (and the preamp **won't** work). Don't try to use a LED here; you don't know that you got the polarity right, and if the polarity is wrong, then it's the same as no jumper installed here.

I still screwed it up

If you manage to get the LED in backwards, and you don't have a vacuum powered desoldering tool, the best way to remove the LED from the board is to sacrifice it by cutting it off of its leads. Now that you don't have to fight with getting both wires loose simultaneously, it should be easy to heat one of the leads while pulling on it with pliers. Then clean the hole out (heat, insert toothpick, or dental probe) and try again. Yes, you get to replace the LED with a new one. Get it right this time.

> **n.b. It is far better and easier to sacrifice the LED than it is to damage the board because you don't have the right desoldering tool. NONE of the other stuff (braid, hand-desoldering pump, etc.) works effectively with plated-thru-holes in a 2-sided board. You're going to risk damaging the circuit board because of a 10-cent LED?**

If all else fails, just short the two LED pads together. Remember that the LED is an option.

Choice of Enclosure and Connectors.

The completed board needs to be mounted in a metal enclosure. The die-cast aluminum alloy cases made by Bud Metal Products (CU-124) and Hammond (1590B-BK). The Hammond part comes pre-painted. These cases are particularly suited for this application because they are exceedingly strong yet are easy to machine. The male XLR connector needs a ¾" mounting hole, and the TB4M mini-xlr requires a 15/32" mounting hole. The larger hole can be drilled using a step (cone) bit or punched using a Greenlee chassis punch. The smaller hole is best drilled.

We now supply an internal star lockwasher for the mini-XLR. The correct order of washers for the mini-XLR is: connector, flat washer, chassis, star lockwasher, nut. Prior to threading the nut onto the connector body, apply a drop of Loctite or nail polish to the threads as a chemical lockwasher. Then tighten the nut. Now put a smear of paint from the nut onto the chassis.

A pair of threaded spacers are included for mounting the board into your enclosure. The spacers need to be swaged into the circuit board. Do this by inserting the spacer from the bottom (solder side) of the board, then place the assembly solder side down on a hard surface (like concrete). Insert the point of a #2 phillips screwdriver into the end of the spacer where it emerges on the component side of the board. Strike the handle of the screwdriver smartly with a hammer to swage the spacer in place. Repeat for the remaining spacer. The spacers are threaded for 4-40 machine screws.

The input connector (coming from the PZM plate) could be a 3.5mm TRS plug, but that is only really suitable for version 2, where the cable shield is actually connected to circuit ground. The Switchcraft 4-pin mini-XLR connector is a better choice, as you have total control over which conductor goes where and the connectors lock together. Contrary to common practice, put the female connector on the cable coming from the mic and use the chassis-mount male (TB4M) in the box. See Appendix A for mini-XLR connector wiring.

About the Extra 22R resistor and 100nF capacitor

The output connector should be an XLR3-male connector. Connect pin-1 of the XLR connector directly to the chassis box through a very short wire. Alternatively, if you are concerned about possible ground loops (We are), you can ground the box for RF via a 100nF (larger OK) ceramic capacitor (it's important that this is a ceramic capacitor) in parallel with a 22R ½-watt resistor. These parts are included with the kit.

Circuit Description

Refer to the schematic diagrams. The first, *Input Configurations*, shows the three different variations of the input circuit. For the original RS PZM microphones, Q4 acts as a current source load for the microphone capsule. The output of the microphone circuit is coupled via C12 to the differential line driver stage Q2.

For the other microphone configurations (version 2), Q4 is not present, and Q1 acts as a current source load for the microphone capsule. The output of the microphone circuit is coupled via C12 to the differential line driver stage Q2.

For the direct box application (version 3), matched JFETs Q1 and Q4 are connected as a current-source loaded source

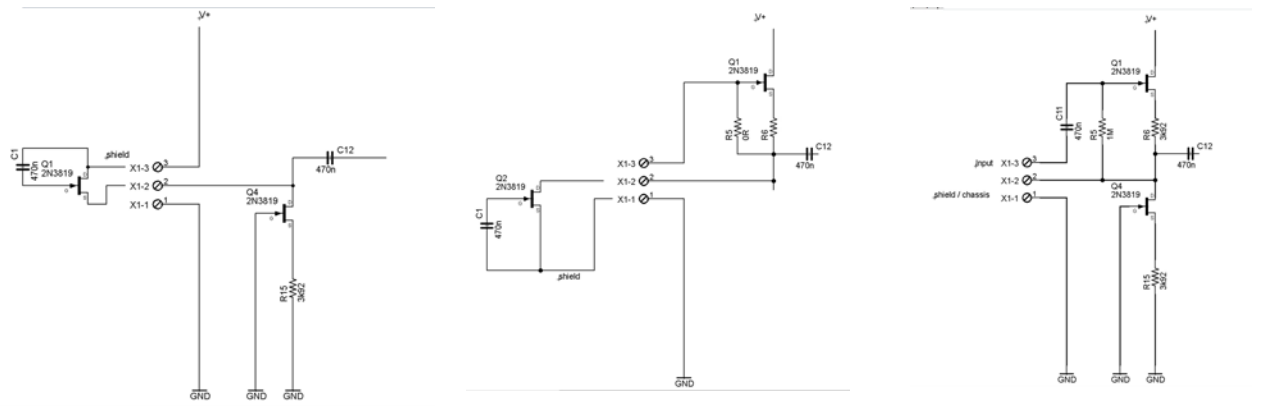

Config 1 **Config 2** **Config 3**

Input Configurations Details

follower. Q1 is the source follower and Q4 is the current source load.

The differential line driver uses supermatch transistor Q2 connected as a differential amplifier. R13 and R14 provide some degeneration and R11 partially couples the emitters to raise the gain. The supplied value of R11 provides about 6dB of gain.

Yes, you could use a pot here to make the gain variable, but it needs to have a reverse-log taper (CCW-log), which is difficult to find (you could use a CW-log pot, but to spread the range evenly across the rotation, it will need to be connected so that it rotates "backwards." A linear taper pot will have most of its range in the first 50% of its rotation). Another possibility would

be to use a make-before-break switch with discrete resistors. Gain and headroom are always a balancing act; increasing the gain is always at the expense of headroom.

Q5 is a current source that sets the operating point of the diff-amp. C5 ensures that the base of Q2B is at AC ground.

R7 and R8 are the collector load resistors for Q8 (along with the phantom feed resistors at the microphone input). Their junction provides a place to pick off the dc phantom power voltage. This voltage operates the remainder of the circuitry.

The currents drawn by the different portions of the circuit cause the collector voltage of Q2A/B to be roughly 20V. The output voltage depends on the voltage divider R10/R12, Since R10/R12 are equal, the voltage at their junction is roughly 1/2 the voltage at the top of the divider, just slightly more than 10V. Emitter follower Q3's base is tied to the junction of R10 and R12, so its emitter voltage is its base voltage minus one V_{be} drop or about 10V to the microphone capsule and the two input FETs. C6 ensures that there is no residual audio at Q3's base and C7 bypasses any noise output from Q3 to ground.

The two ferrite beads and C1, C2 make a lowpass filter at RF frequencies to guard against RFI caused by the balanced output line acting as an antenna. C8 and C9, normally not used, allow changing the filter to either a PI configuration or to a lowpass filter looking towards the microphone cable.

The LED, when installed, is in series with the ground return of the diffamp, Nearly all of the current drawn by the circuit flows thru this point, and this allows having the LED, without having it's attendant current drain.

In Case of Difficulty

A few builders have had trouble making the circuit work. Almost without exception, most problems are due to poor soldering technique. Check your connections. Look for stuffing errors. Try cleaning the residual flux off the solder side of the board using 95% isopropyl alcohol and a brush or use a commercial flux remover so that you can truly see the solder joints.

All voltage measurements made with a DMM, with respect to ground (Pin 1 of the XLR connector), unless otherwise noted, with the microphone capsule connected (except for step 1) and the circuit connected to an operating P48 input..

Step	What to do	Expected reading	Remarks
1.	With the capsule *disconnected*, and the preamp connected to a working microphone input with P48 supplied and the gain turned up, touch the input connection with your finger.	You should hear hum when you touch the input.	The preamp is *(apparently)* working. Reconnect the microphone capsule and continue.
2.	If the LED is installed, is it illuminated? If it is not installed, there must be a wire jumper installed in its place**. If the LED is installed and NOT lit, the circuit will NOT operate.**	LED is lit.	Checks the current source, Q5 and for current flow from the P48 source. You can temporarily short out the LED for troubleshooting.
2a	Ensure that the jumpers at R4 and R17 are installed.	n/a	Jumpers between pins 1 and 3 of the trimpot. Pins 2-3 also ok.
2b	Ensure that the LM394 leads are inserted into the DIP pads, and not the small pads inside the outline of the DIP package outline.	n/a	Carefully resolder if necessary. Pins 4 and 5 not used.
3.	What is the voltage at the junction of R7, R8, and R10 to ground?	18-22VDC	This is the supply voltage to the circuit.
4.	The voltage ACROSS R16.	No more than 0.7v.	It is limited by the Vbe voltage of Q5 and the two series diodes D1 and D2. This is an across voltage because the presence or absence of the LED is not known. If this voltage is OK, AND the LED is lit (if present), then this part of the circuit is OK. If there is no LED, then the LED connections must be jumpered together.
5.	The voltage at the 'top' of R3 and R9 (referring to the schematic) should be about 1/2 of that measured in step	About 1/2 of reading in Step 1	Power supply to electret capsule and voltage reference for diffamp. If the

	1 minus about 0.6v (the Vbe drop of Q3).		voltage is high, then Q3 is probably toast. If it is low, then there's something wrong with R10 or R12. Correct value stuffed?
6.	If the voltage across the capsule matches (or nearly matches) the voltage in step 3, then the capsule isn't drawing current. That could be a bad capsule, bad cable, or bad connections between the board and the cable. This is independent of configuration.	3 to 6v, possibly higher, but not 10v or more.	If the voltage is that high, and you are using configuration 2, then check Q2 and its circuit. If you are using configuration 1, then check current source Q1 and its circuit.
7.	The voltages at the junctions of L1 and R7, and R8 and L2, should be equal, or very, very nearly so (within millivolts).	18 to 22v ref to ground	check voltage in steps 6 and 7; these should also be very, very nearly equal. These are the XLR connections.
8.	The voltages at the bases of Q2 (ref to ground) should also be very, very nearly equal, if not equal (equal is ideal)	slightly less than what was measured in step 5.	component values (R3, R9) or capacitors C12, C5.
9.	The voltages at the emitters of Q2 (ref to ground) should also be equal, or very, very nearly that.	about 0.6v less than that measured in step 8.	Q2 may have been maimed, especially if the collector voltages aren't very nearly equal.
10.	There should be substantially no voltage drop across R3 and R9. or stated another way, the voltages at the BOTTOM (referring to the schematic) of R3 and R9 should be very nearly the same as that measured in step 3.	zero, 0.	If there is voltage drop, then Q2 may have been maimed, or C12 or C5 are defective (more likely C5). C5 may be soldered in backwards (white polarity stripe goes towards the OUTSIDE of the board).

If you decide to contact Uneeda Audio, please include the results of the tests in Steps 1 and 2, and the voltages measured in steps 3-10. Please state the configuration you built, what other test equipment you have or don't have (DMM, O'Scope, Signal Generator), and your electronics experience level (rank novice, veteran kit builder, EE, etc.)

Licensing Information

NOTE: No license is granted with respect to this circuit. Permission is hereby granted to construct the circuit and use it for your own use. Permission to use this circuit in a commercial context (i.e. turn it into a product for sale) is not granted. Purchasing the kit is a per-instance license to construct the circuit. Doing this for someone else, for profit, is allowed.

Warranty

This circuit is warranted to work when constructed properly. Only the circuitry contained on the printed circuit board is warranted. The microphone element connected thereto and its connecting cable is specifically excluded. The kit is warranted to contain all parts shown in the parts list. There are no other warranties, expressed, implied, for fitness of purpose, for loss of revenue or for anything else due to the use of this circuit.

With the exception of the LM394, Uneeda Audio will supply up to 6 replacement parts at no charge. There are limits to our generosity, and you are advised to not test them.[3]

Circuit boards damaged by poor soldering (or desoldering) technique or improper solder or solder flux will not be replaced. Circuit boards returned for repair will be repaired for the cost of time and materials unless our inspection reveals a faulty component. The criterion for this judgment solely rests with Uneeda Audio and with no other person or persons.

By modifying your Radio Shack product in this manner, you acknowledge and understand that any Radio Shack warranty that your product may have had is now void. (it's old enough that the warranty has long since expired.) Radio Shack doesn't know anything about this product, so don't ask them about it (not that they know anything at all about anything). Always remember the microphone's humble beginnings.

[3] This offer can be withdrawn at a moment's notice, at our whim and/or caprice.

Disclaimer

Radio Shack (RS) is now a trademark of General Wireless. When RS sold the PZM microphones, they were a part of Tandy Corporation.

PZM is a trademark of Crown International, a Harman Corporation. Shure is a trademark of Shure Incorporated.

The PZM Patent, US4,361,736, expired in 1999, however Crown International still owns the trademark.

Shure is a trademark of Shure Brothers

The mention or use of these and other trademarks in no way affects the rights of the trademark owners.

Appendix A. Connector Wiring

Because the connector wiring changes with configuration, it can be a bit confusing. Here, in one place, in tabular form, is the wiring for all configurations and all connectors.

XLR Connector wiring							
	Male Std XLR		**Male Mini XLR**		**Female Cable mount mini xlr**		
Config 1	**A3M**	**PCB**	**TB4M**	**PCB**	**TA4F**	**Microphone**	**Remarks**
	1+ case	X2-1	1	NC	1	NC	For 33-1080 and 33-1090 Pin 1 not used Connect A3M pin 1 to chassis via 22R paralleled with 100nF ceramic.
	2	X2-2	2	X1-3	2	shield	
	3	X2-3	3	X1-2	3	Mic hot/center conductor	
			4	X1-2	4	jump to pin 3	For Shure compatibility
Config 2	**A3M**	**PCB**	**TB4M**	**PCB**	**TA4F**	**Microphone**	**Remarks**
	1+ case	X2-1	1	X1-1	1	Shield	For 33-3020, 33-3022, and 33-3041 or generic ECM. Connect A3M pin 1 to chassis via 22R paralleled with 100nF ceramic.
	2	X2-3	2&4	NC	2	5k1 to pin 3 inside TA4F	Pullup resistor for microphone. Probably should be 1/8-w for size. Only needed for shure compatibility.
	3	X2-2	3	X1-2	3	Mic center cond.	
					4	NC	
Config 3	**A3M**	**PCB**	**Phone jack**	**PCB**			**Remarks**
	1	X2-1	sleeve	X1-1			Direct Box Connect A3M pin 1 to chassis via 22R paralleled with 100nF ceramic.
	2	X2-2	NC	X1-2			
	3	X2-3	Tip	X1-3			
Note: NC means No Connection							

Shure Bodypack Transmitter Wiring

TA4	**Connection**	**Remarks**
Pin 1	Shield	
Pin 2	Bias (+5Vdc)	
Pin 3	Audio input	
Pin 4	20k resistor to ground	load for ECM

Appendix B. Mini-XLR Wiring

The Switchcraft mini-XLR connectors require a bit of discussion on their own, especially if you don't have any previous experience with this connector. In particular, the cable connector warrants closer examination. Disassemble the connector by unscrewing the black strain relief at the rear of the connector. Grasp the connector body in one hand, and the metal strain relief in the other. Pull them gently apart. Disengage the metal strain relief from the connector body. The actual female connector insert may or may not come out. If it doesn't, then use a small screwdriver at the connector face to push the insert through the connector shell and out the rear.

Once the pieces are out in the open, carefully disassemble them, taking note of how they go back together. Practice reassembly several times until you are familiar with the process. Now you can begin wiring.

The female cable connector is fiddly. The insulator at the rear (solder end) detaches from the female insert, AND the female insert pushes out of the body to the rear. When you go to attach the wire, thread the wire thru the strain relief, and then thru the detached part of the female insert. Now do your soldering. Take note of the pin locations before you start.

Assemble by pushing the insert into the connector shell, mate the other insulator part, then slide the crimp-on strain relief onto the cable and mate it with the insert. It does require a bit of force. Leave a bit of wire loose between the connector insert and the first crimp point (stress relief), then crimp the metal tangs down onto the cable. Now screw the strain relief onto the connector shell.

Shrink sleeving between the exit point of the strain relief and into the crimp point can be used to reinforce this part of the assembly.

Note that the pin numbers are molded into the inserts. You need good eyesight to spot this.

Part number TA4(MF) is the cable mount connector.
Part number TB4(MF) is the chassis mount connector.

If you use the same wiring that Shure does for their wireless mics, then you can also plug any microphone configuration into a Shure wireless transmitter (or one of their lavalier mikes into a configuration 2 preamp).

If you're using the configuration 1 wiring, note that the shield of the cable going to the PZM plate is **NOT** grounded, so you need to be careful that once the connector is assembled, the shield of this cable can not touch the connector shell or the crimp-on strain relief. Judicious application of shrink sleeving to the outer jacket of the cable helps here.

The configuration 2 wiring is compatible with Shure wireless hardware as long as you include a 5k1 resistor within the connector. For size reasons, an 1/8w resistor is preferred, but a 1/4w part will fit if you're meticulous.

If you have both microphone models, and you use this wiring scheme, then plugging the wrong microphone into the wrong box won't damage anything (although you won't get sound).

Remember: if you wire the microphones as shown in the table, you can use either with a Shure wireless transmitter.

Config 1 Chassis		Config 2 Chassis	
TB4M	**PCB**	**TB4M**	**PCB**
1	NC	1	X1-1
2	X1-3	2	NC
3	X1-2	3	X1-2
4	X1-2	4	NC

Config 1 Cable		Config 2 Cable	
TA4F	**Cable**	**TA4F**	**Cable**
1	NC	1	Shield
2	Shield	2	5k1 to pin 3
3	Center conductor	3	Center conductor
4	Tie to pin 3	4	NC

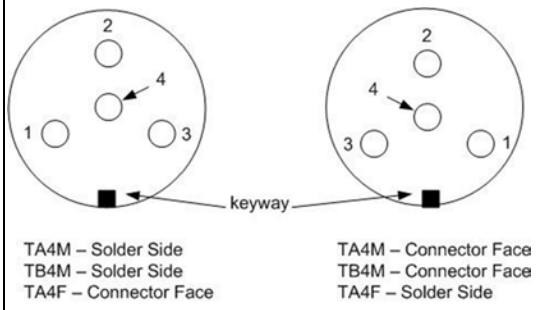

Shure Beltpack Connector Pin Asignments

Pin 1 – Shield
Pin 2 – 5V power for ECM
Pin 3 – Audio Input to beltpack
Pin 4 – 20k resistor to pin 1.

Mini XLR connector wiring.

Appendix C. RS PZM (de)Evolution

There are now four microphones that have been sold over the years with the appellation, “Pressure Zone Microphone” or “Boundary Microphone.”

The 33-1090A is the only one of the four that uses the patented Pressure Zone principle. The second two are boundary microphones, in which a mike capsule is mounted parallel to a boundary plane (the diaphragm is perpendicular to the boundary. The 33-3022 was designed to work with an input having electret bias voltage present, such as the soundcard of a computer or the mic input of a camcorder. The latest and newest isn’t a boundary microphone at all. It is just an omni capsule mounted at the top of the conical housing.

Only the 33-109A is a configuration 1 microphone. The rest are all configuration 2.

RS currently sells a Boundary Microphone made by Audio Technica, Model ATR-97, SKU 55016481. Nothing is known about this microphone.

The 33-3041 Business Microphone is just an omnidirectional electret microphone capsule mounted at the end of the housing pointing straight up in the air (the 2nd object from the left in the photo). This is not a PZM nor is it a boundary microphone. It is a configuration 2 microphone.

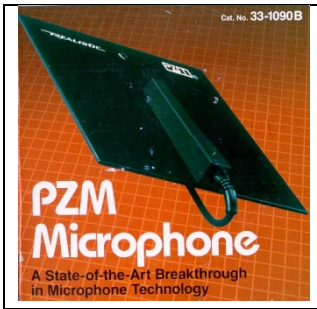	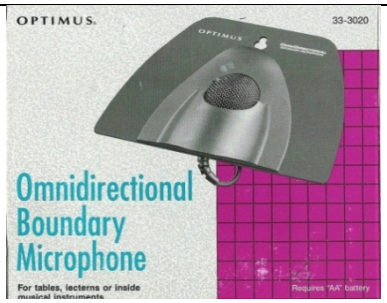	
33-1080 and 33-1090A PZM Config 1.	**33-3020 Boundary Microphone Config 2**	**33-3022 Boundary Microphone Config 2**
		
Audio Technica ATR-97 Boundary Microphone	**33-3041 Business Microphone Config 2**	

Appendix D. Schematic, Assembly Drawings, and PCB X-Ray view.

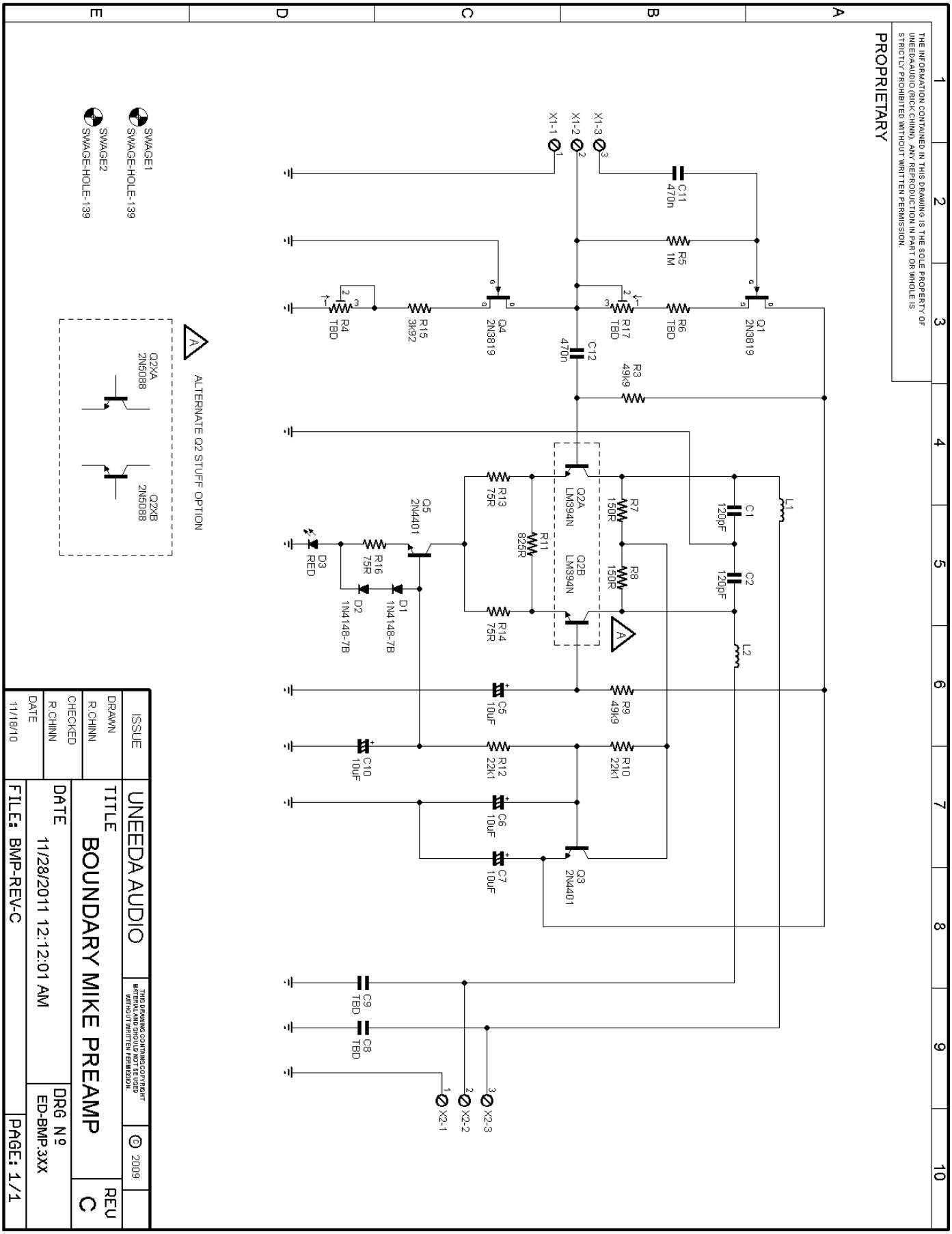

Configuration 1. For use with 33-1080 and 33-1090 microphones

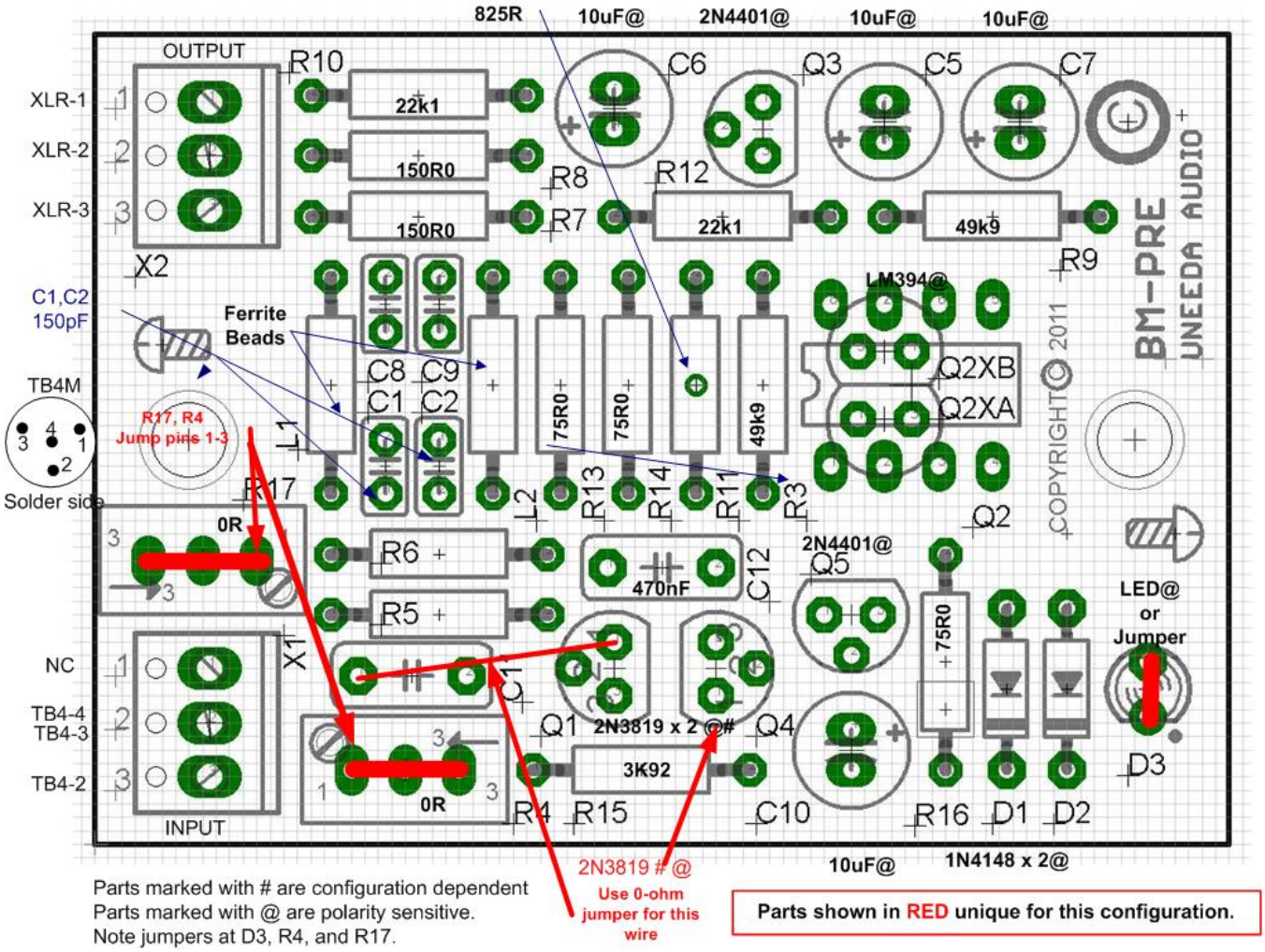

Don't forget that if you don't install an LED at D3, you must jumper these connections with a piece of wire.

Connections	**Configuration 1**	
X1-1	circuit ground	n/c
X1-2	PZM Audio	TA4-M-3 and TA4-M-4
X1-3	PZM Shield	TA4-M-2
X2-1	Circuit Ground	XLR3-M-1
X2-2	Output hi	XLR3-M-2
X2-3	Output lo	XLR3-M-3
Chassis	Connect to XLR3-M-1 via 22R parallel with 100nF ceramic (not included).	
Jumpers		
R4	Pins 1 and 2	Pins 1 and 3 are also ok.
R11	Pins 1 and 2	Pins 1 and 3 are also ok.
D3	jumper connection if LED is not installed	

Configuration 2. For 33-3020 and 33-3022 microphones.

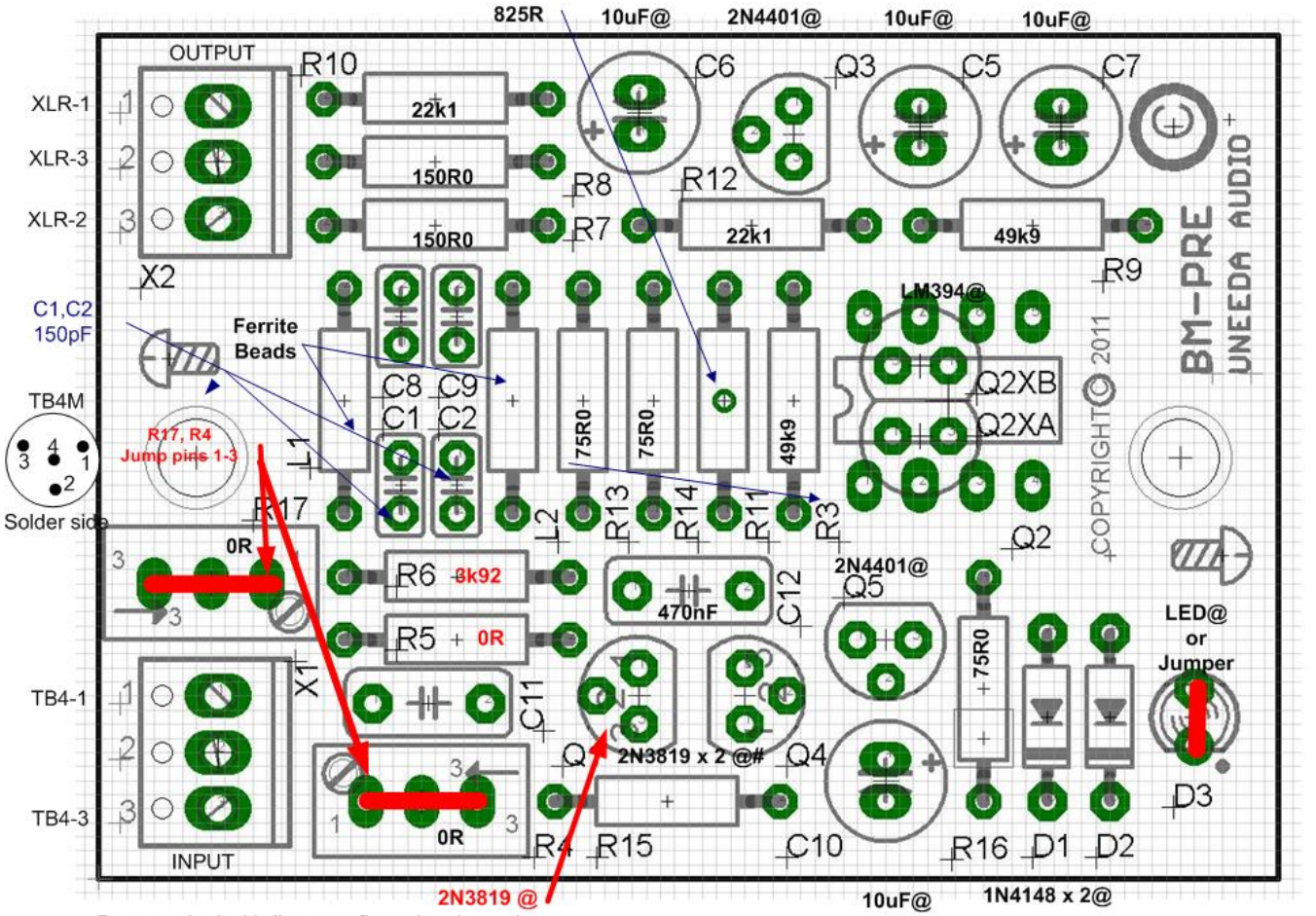

Parts marked with # are configuration dependent
Parts marked with @ are polarity sensitive.
Note jumpers at D3, R4, and R17.

Parts shown in RED unique for this configuration.

Don't forget that if you don't install an LED at D3, you must jumper these connections with a piece of wire.

Connections	**Configuration 2**	
X1-1	PZM Shield	TA4-M-1
X1-2	NC	
X1-3	PZM Audio	TA4-M-3
Chassis	Connect to XLR3-M-1 via 22R parallel with 100nF ceramic (not included).	
X2-1	Circuit Ground	XLR3-M-1
X2-2	Output hi	XLR3-M-3
X2-3	Output lo	XLR3-M-2
Jumpers		
R4	Pins 1 and 2	Pins 1 and 3 are also ok
R11	Pins 1 and 2	Pins 1 and 3 are also ok
D3	jumper connection if LED is not installed	

Configuration 3. Active Direct Box

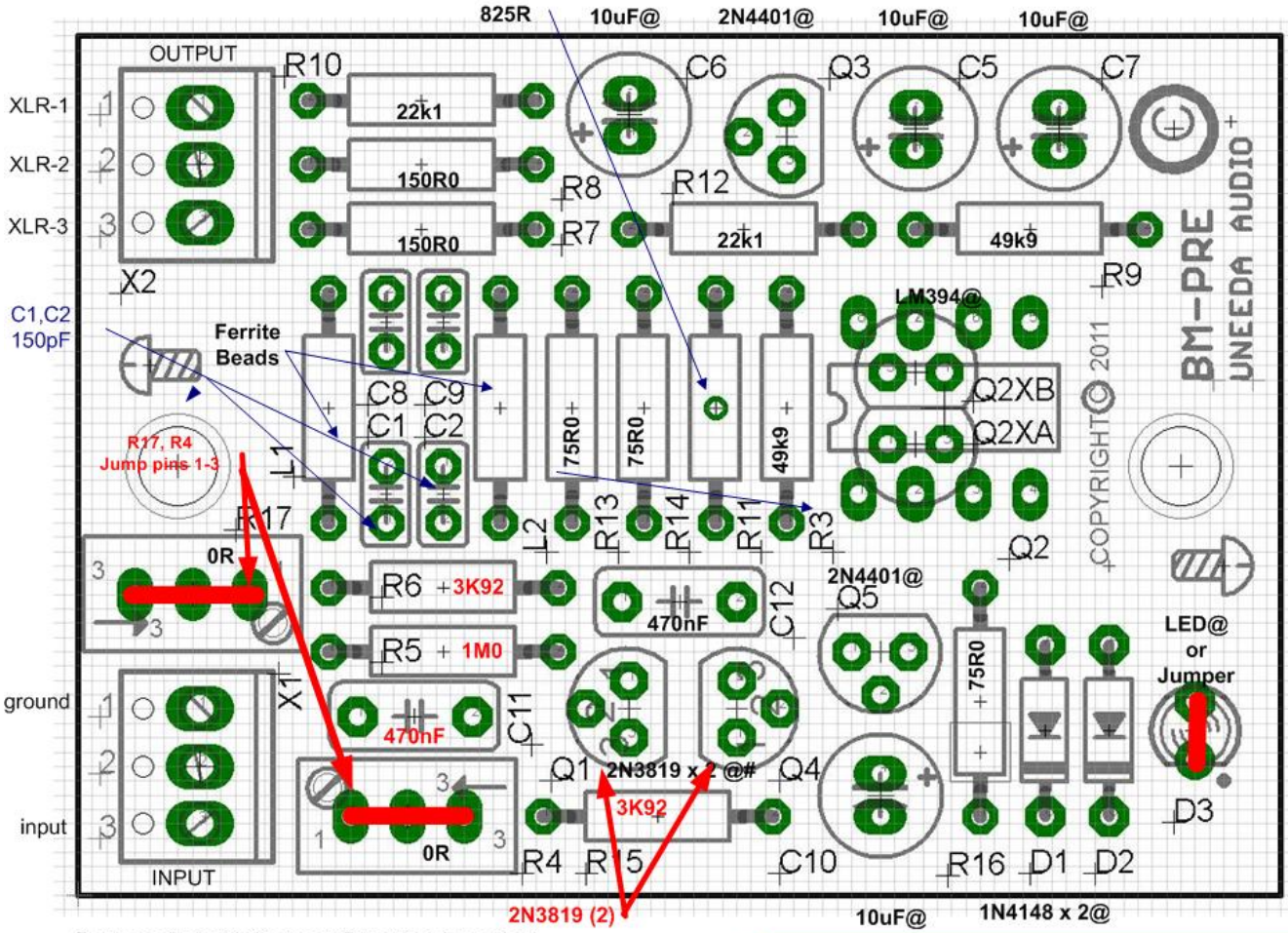

Parts marked with # are configuration dependent
Parts marked with @ are polarity sensitive.
Note jumpers at D3, R4, and R17.

Parts shown in RED unique for this configuration.

Don't forget that if you don't install an LED at D3, you must jumper these connections with a piece of wire.

Connections	**Configuration 3**	
X1-1	circuit ground	¼" sleeve
X1-2	n/c	n/c
X1-3	Input audio	¼" tip
Chassis	Connect to XLR3-M-1 via 22R parallel with 100nF ceramic (not included).	
X2-1	Circuit Ground	XLR3-M-1
X2-2	Output hi	XLR3-M-2
X2-3	Output lo	XLR3-M-3
Jumpers		
R4	Pins 1 and 2	Pins 1 and 3 are also ok
R11	Pins 1 and 2	Pins 1 and 3 are also ok
D3	jumper connection if LED is not installed	

Refer to the assembly drawings at the end of this document for drawings that depict each of the three configurations.

This drawing shows the PCB traces which are handy when troubleshooting, and it also gives component locations, but this drawing should not be used for assembly because the actual assembly drawings show details that are not shown here. If you look on the input and output connectors, you'll see traces that appear to short the connectors out. This is not the case. Those traces are the outlines for a ground plane, which surrounds the board and helps to provide a low-impedance central ground for the circuit. They are placed as shown because the layout program changes the locations slightly when the PCB CAD program applies the grounded copper pour.

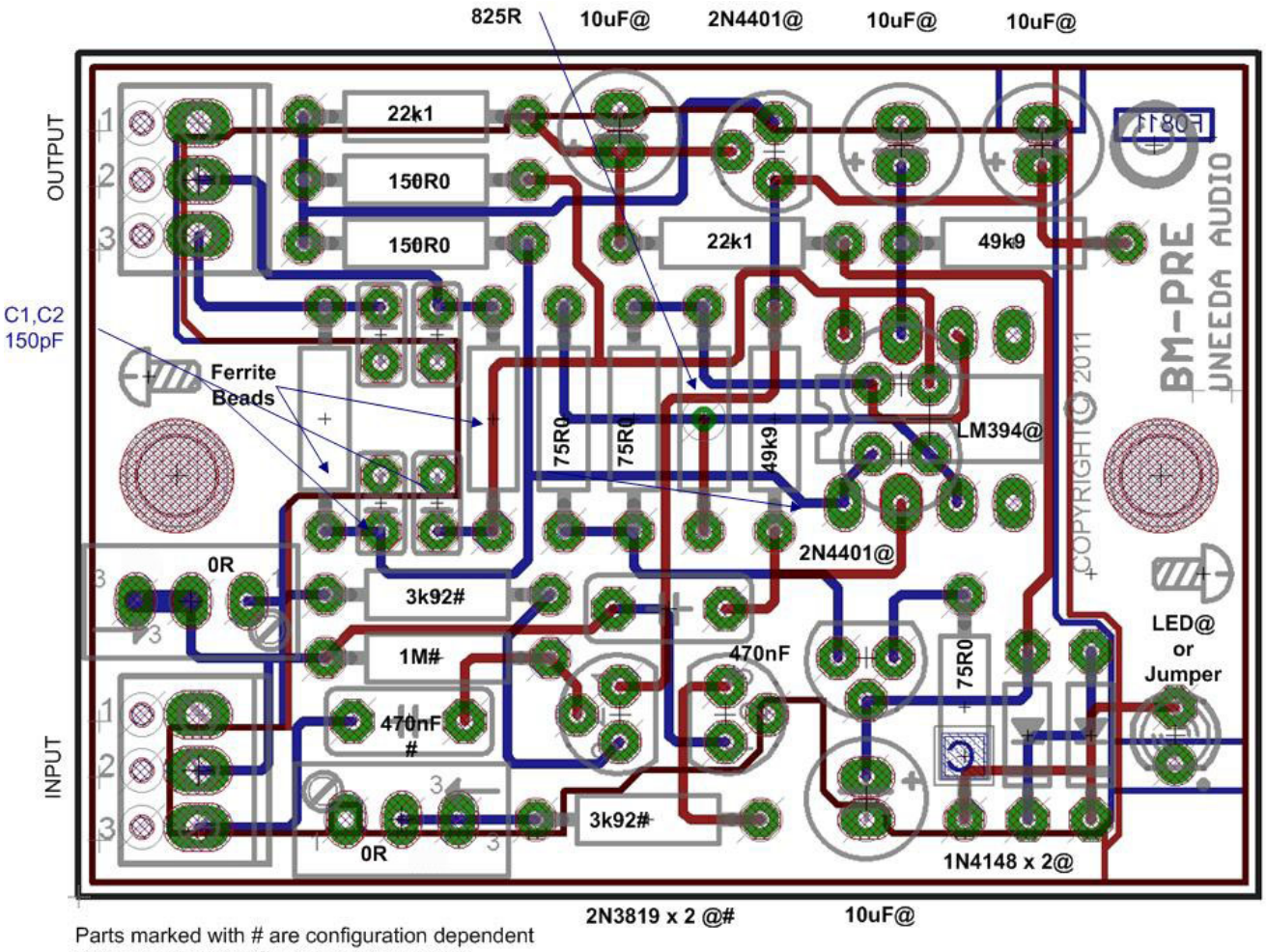

Parts marked with # are configuration dependent
Parts marked with @ are polarity sensitive.

Revision History

9/11/06	Revised from 2003 version. Added new pix, added individual stuffing diags for each config.
9/20/06	Clarified connections for config 1, and changed wording for I/O connections for other 2 configs. Fixed error in Config 1 instructions; had Q2 rather than Q1 for the jumper location.
3/24/07	Rev C2. Revised and clarified wiring for Mini-XLR connector. Changed compatibility notice for Shure wireless transmitters**.**
4/1/07	RevC3. Added “in case of difficulty” section.
2/21/08	Rev C4. Corrected typo in “in case of difficulty” section and clarified things.
3/16/08	Rev C5. Corrected connections in text for config 2; checked others.
3/22/08	Rev C6. Removed Q4 from BOM, changed C1, C2, C8, C9 to be either 120pf or 150pf Added Appendix A, revised wiring for mini-xlr connectors (moved material from body) Added Appendix B, described the four different models.
4/6/08	Rev C7: Corrected typo for input connections in instructions for configuration 1 and 2 (page 4). Added language describing the mini-XLR connector assembly and caveats.
11/4/08	Rev C8 Slight change in circuit description (function of R11). Revised Mini-XLR connection diagram to make clearer.
2/23/09	Rev C9 Added D1, D2 to BOM. They were omitted.
3/13/2009	Rev C10 Added Appendix A with table for all configuration wiring. Original appendices A & B renamed. Changed case connection for Config 3.
3/14/2009	Rev C10.1 Clarified Appendix A table, Corrected value error in schematic (R10, R12). Schematic revised to show R1, R2 as inductors, now designated L1, L2.
12/13/2009	Rev C10.2 Clarified some small details. Added note about replacement parts. No major changes.
3/15/2010	Rev C10.3 Clarified color code in parts list, added note about color bands on diodes in assembly instructions, other small changes, revised configuration schematics drawing.
4/1/2010	Rev C10.4 Added per-instance wording in license disclaimer.
7/25/2011	Rev C10.5 Corrected color code for R6 and R15 on page 2.
7/25/2011	Rev C10.6 Added additional words for RF grounding the metal box.
9/28/2011	Rev C10.7 Added D1-D2 to assembly sequence, added words to assembly step 8, and Appendix B.
11/28/2011	Rev D.1 Revised for PCB Revision C.
12/1/2011	Rev D.2 Added jumpers around R4 and R17 in assembly sequence.
8/25/2012	Rev D.3 Revised pictures, and assembly drawings for Revision C PCB.
9/1/2012	Rev D.4 Revised pictures to correct errors, and added connection data to assembly drawings.
4/5/2013	Rev D.5 Added assembly details for D3 LED and revised jumpering for R4 and R11.
6/26/2013	Rev D.6 Added reminder on first assembly drawing for builder to use assembly drawings at the end of the manual, and that the initial drawing is provided to show the PCB traces. Also correct error in troubleshooting table involving R4 and R17. R17 was identified as R11 (See Rev D.5). Repaginated. Added note about R4 and R17 in each of the configuration specific assembly sequences. Revised Parts List, added Front cover and TofC.
7/15/2013	Rev D.7 Further revision of the language around the LED, and removed “D3” as additional landmark for LED orientation. Added graphic to solidify relation between polarity, LED symbol, physical part, and basing.
8/31/2013	Rev D.8 Added Shure bodypack wiring to Appendix A, clarified XLR wiring. Added XLR wiring to stuffing diagrams. Revised jumper wiring across trimpots. Corrected wiring error for Shure wireless (TA4 wiring).
9/12/2013	Rev D.8.1 Further revisions of stuffing diagrams at end of manual
11/24/2013	Rev D.9 Fixed error in drawing of TB4M insert. Pins 2-3 were reversed.
6/23/2014	Rev D.10 Clarified drawing of mini-xlr connectors to indicate location of the keyway. Clarified swage standoff process.
7/1/2014	Rev D.11 Fixed error in troubleshooting table, steps 8 and 9, and elaborated on LED lighting as a requirement in step 2. Grounding network on page 10 clarified. Note about sending measurements back was clarified, as well as the paragraphs on soldering. Added words in section about LED, Added more about jumpers around R4 and R17 in procedures for all configurations.
1/8/2016	Rev D.12 Clarified the use of the 22R/100nF network and added refs to the page location in several places. Added these parts to the parts list. The Disclaimer was lengthened. Pages 3 and 4 wording modified, sometimes for strength/emphasis, others for clarity. Strengthened caution about desoldering.

Parts List

CFG 1	CFG 2	CFG 3	Ref Des	Description	Remarks
0	1	1	R6	Res, MF, 3k92, 1% <org/wht/red/brn>	
1	0	1	R15	Res, MF, 3k92, 1% <org/wht/red/brn>	
2	2	2	R3, R9	Res, MF, 49k9, 1% <yel/wht/wht/red>	
1	1	1	R11	Res, MF, 825R, 1% <gry/red/grn/blk>	Gain set resistor
3	3	3	R13, R14, R16	Res, MF, 75R0, 1% <vio/grn/blk/gold>	
2	2	2	R7, R8	Res, MF, 150R, 1% <brn/grn/blk/blk>	
2	2	2	R10, R12	Res, MF, 22k1, 1% <red/red/brn/red>	
0	0	2	R1, R5	Res, MF, 1M0, 1% <brn/blk/blk/yel>	R5 mounted on PCB. R1 mounted on input jack.
0	1	0	R5	Jumper, 0-ohm (looks like a resistor, but with a single black band)	
0	0	0	R4, R17	trimpots. For future use	not supplied
1	0	0	no designation, see assembly dwg for config 1.	0-ohm jumper	
2	2	2	L1, L2	Bead, Ferrite, Taiyo Yuden FBA04VA450BA-00	PCB marked R1, R2
1	1	2	C11, C12	Cap, film, 470nF	one part used for configs 1, 2, and two parts used for config 3.
3	3	3	C5, C6, C7, C10	Cap, lytic, submini, 10uF, 35V	
2	2	2	C1, C2, C8, C9	Cap, cer, 120pf or 150pf	C8, C9 not stuffed
2	2	2	D1, D2	Diode, 1N914/1N4148	
0	1	0	Q1	Transistor, JFET, N-CH, 2N3819	config 2
1	0	0	Q4	Transistor, JFET, N-CH, 2N3819	config 1
0	0	2	Q1, Q4	Transistor, JFET, N-CH, 2N3819, 10% match	config 3
2	2	2	Q3, Q5	Transistor, NPN, 2N4401	
1	1	1	Q2	Transistor, dual, supermatch, NPN, LM394	
opt	opt	opt	D3	Red Led or jumper**. If no LED, then stuff jumper**.	Not supplied. Other colors ok, but red preferred.
1	1		PCB	Printed Circuit Board	
0	0		R2	This reference not used.	
1	1	1	no reference, not on pcb	Res, CF, 22R, 0.5W	**See Page 10.**
1	1	1	no reference, not on pcb	Cap, cer, 100nF	**See Page 10.**